INNOVATIVE HEPA FILTER DESIGNS TO REDUCE WASTE GENERATION AND SIMPLIFY WASTE TREATMENT

K. H. Oma, W. A. Ross
Pacific Northwest Laboratory
Richland, Washington 99352

W. L. Smith, J. R. Adams
Mine Safety Appliances Company
Evans City, Pennsylvania 16033

ABSTRACT

The treatment and disposal of spent high-efficiency particulate air (HEPA) filters has presented a problem at some defense production plants and could be a problem at potential future spent-fuel consolidation or fuel-reprocessing facilities. During studies of transuranic (TRU) waste treatment options conducted by Pacific Northwest Laboratory, it was concluded that treatment of spent HEPA filters would become easier and less costly if some modifications were made to the present materials of construction and design. This study was undertaken to develop and evaluate alternative materials and innovative designs for HEPA filters, making them more compatible with volume reduction technology. The following treatment options were selected for this study: 1) no treatment; 2) compaction; 3) supercompaction; 4) incinerate and melt; and 5) separate the frame from the media and dispose of the frame as low-level waste, and incinerate and melt the filter media and sealant. Forty HEPA design concepts were identified and evaluated by means of a figure-of-merit methodology for technical performance and an economic evaluation that considered filter fabrication and disposal costs. Results of the study indicate that if improved HEPA designs are combined with volume reduction treatments, the costs of filter disposal can be reduced substantially over the use of standard-flow filter designs with no volume reduction treatment. It is estimated that by combining the new design concepts with waste volume reduction treatments, manufacturing and disposal costs can be reduced by $290 or more per filter if classified as low-level waste (LLW) and up to $23,000 per filter if it is high-activity waste (containing activity greater than class-C LLW) and requires repository disposal.

INTRODUCTION

The treatment and disposal of used high-efficiency particulate air (HEPA) filters has presented a problem at some defense sites and is a potential problem for future spent-fuel consolidation and fuel-reprocessing facilities. This issue was highlighted in two recent waste treatment studies performed by Pacific Northwest Laboratory (PNL) for the Department of Energy. These studies are part of the Nuclear Waste Treatment Program at PNL. The first study considered the treatment of wastes that would be generated during spent-fuel reprocessing (1), and the second study evaluated treatment options for secondary wastes generated during spent-fuel rod consolidation (2). In these studies, it was found that the volume of used HEPA filters was substantial, rivaling that of the consolidated spent fuel or the non-fuel-bearing hardware (NFBH). During a review of volume reduction methods for the used HEPAs, it was found that some of the more attractive treatments are not feasible because of the materials and construction methods currently used in making the filters. Three specific concerns were identified:

1. Most HEPA filters are composites of metallic, ceramic, and organic materials. Metal frames are difficult to process because of their high strength and bulky dimensions. Aluminum, used as separator material in many HEPA filter designs, causes undesirable gas generation if the filters are cemented. Organic materials, present as gaskets, sealants, binders, and frames, may prevent the waste from being certified for disposal with other high-activity wastes (HAWs).
2. The rectangular shape of the filters results in inefficient packaging within standard cylindrical containers.
3. Separation of the media from the frames to permit low-level waste (LLW) disposal of the frames and repository disposal of the media is difficult because of the organic glues used as sealants and the mechanical structure of the frames.

The purpose of the present study has been to identify and evaluate new HEPA filter designs that reduce waste generation, increase the ease of volume reduction, and improve the overall economics of disposal. Forty filter designs were identified that have potential to improve the ease and cost of waste management. The designs were evaluated on the basis of technical merit, manufacturing cost, and waste treatment costs. This report summarizes the evaluation and conclusions of the study.

HEPA FILTER DESIGNS

Alternative HEPA designs and materials of construction were identified for both wood-framed and metal-framed filters. This effort focused on a search for innovative alternatives to present-generation frames, filter packs, frame-to-media seals, face guards, sealants, and adhesives. The filter designs are listed in Table I with rated flow capacities and materials of construction. Most of the designs fit the housing for a standard size 5 filter measuring 61.0 x 61.0 x 29.2 cm (24 x 24 x 11-1/2 in.). The exceptions are the two circular designs (1D and 1E), the deep cassette (6A), and the panel mini-pleat (6B).

TABLE I

HEPA Design Concepts, Rated Flows, and Materials of Construction

		Rated Flow, m^3/min (cfm)	Materials of Construction		
	Design Concept		Frame	Separator	Sealant
1A	Standard collapsible	28.3 (1000)	Steel angle	Aluminum	Silicone
1B	All-media collapsible	39.6 (1400)	Steel angle	(none)	Silicone
1C	Cassette collapsible	56.6 (2000)	Steel angle	PVA	Silicone
1D	Spiral circular	28.3 (1000)	Stainless	Aluminum	Neoprene
1E	Mini-pleat circular	28.3 (1000)	Stainless	PVA	Silicone
2A1	Standard latch-frame	28.3 (1000)	Stainless	Aluminum	Urethane
2A2	Standard interlock-frame	28.3 (1000)	Stainless	Aluminum	Urethane
2A3	Standard pan-frame	28.3 (1000)	Stainless	Aluminum	Urethane
2B1	All-media latch-frame	39.6 (1400)	Stainless	(none)	Urethane
2B2	All-media interlock-frame	39.6 (1400)	Stainless	(none)	Urethane
2B3	All-media pan-frame	39.6 (1400)	Stainless	(none)	Urethane
2C1	Cassette latch-frame	56.6 (2000)	Stainless	PVA	Silicone
2C2	Cassette interlock-frame	56.6 (2000)	Stainless	PVA	Silicone
2C3	Cassette pan-frame	56.6 (2000)	Stainless	PVA	Silicone
A1	Standard metal-frame	28.3 (1000)	Stainless	Aluminum	Glass fiber
3A2	Standard metal-frame	28.3 (1000)	Stainless	Aluminum	Epoxy
3A3	Standard metal-frame	28.3 (1000)	Stainless	Aluminum	Silicone
3B	All-media metal-frame	39.6 (1400)	Stainless	(none)	Urethane
3C1	Cassette metal-frame	56.6 (2000)	Stainless	PVA	Glass fiber
3C2	Cassette metal-frame	56.6 (2000)	Stainless	PVA	Epoxy
3C3	Cassette metal-frame	56.6 (2000)	Stainless	PVA	Silicone
3D1	Superpack metal-frame	39.6 (1400)	Stainless	Aluminum	Glass fiber
3D2	Superpack metal-frame	39.6 (1400)	Stainless	Aluminum	Epoxy
3D3	Superpack metal-frame	39.6 (1400)	Stainless	Aluminum	Silicone
4A1	Standard wood-frame	28.3 (1000)	Woodboard	Asbestos	Epoxy
4A2	Standard wood-frame	28.3 (1000)	Woodboard	Fiberglass	Epoxy
4A3	Standard wood-frame	28.3 (1000)	Woodboard	Paper	Epoxy
4B	All-media wood-frame	39.6 (1400)	Woodboard	(none)	Urethane
4C	Cassette wood-frame	56.6 (2000)	Woodboard	PVA	Silicone
4D1	Superpack wood-frame	39.6 (1400)	Woodboard	Asbestos	Epoxy
4D2	Superpack wood-frame	39.6 (1400)	Woodboard	Fiberglass	Epoxy
4D3	Superpack wood-frame	39.6 (1400)	Woodboard	Paper	Epoxy
5A1	Standard plastic-frame	28.3 (1000)	Plastic	Aluminum	Epoxy
5A2	Standard honeycomb-frame	28.3 (1000)	Plastic	Aluminum	Epoxy
5B1	All-media plastic-frame	39.6 (1400)	Plastic	(none)	Urethane
5B2	All-media honeycomb-frame	39.6 (1400)	Plastic	(none)	Urethane
5C1	Cassette plastic-frame	56.6 (2000)	Plastic	PVA	Epoxy
5C2	Cassette honeycomb-frame	56.6 (2000)	Plastic	PVA	Epoxy
6A	High-flow cassette	70.8 (2500)	Stainless	PVA	Silicone
6B	Panel mini-pleat	56.6 (2000)	Stainless	PVA	Epoxy

The HEPA designs have been categorized according to the following objectives:

1. HEPA designs that permit direct disposal in a standard 208-L (55-gal) drum
2. HEPA frame/media interface designs that permit easy remote removal of the media for special treatment
3. metal-framed HEPA designs that contain little or no organics and are suitable for compaction
4. wood-framed HEPA designs that contain no metals and are suitable for treatment by incineration
5. alternate frame materials that lend themselves to easy decontamination, incineration, and/or recycle
6. high-flow HEPA filter designs that have extended lives.

Descriptions of the different media-packing configurations used in the HEPA designs are described below:

- standard - Filter media is supported by separators. Rated flow is 28.3 m^3/min (1000 cfm) for a size 5 filter.
- all media - Filter media is corrugated for self support and requires no separators. Rated flow is 39.6 m^3/min (1400 cfm) for a size 5 filter.
- cassette - Mini-pleat media is arranged to maximize the flow capacity. Rated flow is 56.6 m^3/min (2000 cfm) for a size 5 filter.
- superpack - Tightly packed media is supported by separators. Rated flow is 39.6 m^3/min (1400 cfm) for a size 5 filter.
- circular - Filter is configured in a cylinder 55.9 cm (22 in.) in diameter by 40.6 cm (16 in.) long. Rated flow is 28.3 m^3/min (1000 cfm).

- high-flow cassette - Same as cassette except 45.7 cm (18 in.) deep. Rated flow is 70.8 m^3/min (2500 cfm).

- panel mini-pleat - Filter consists of panels 0.61 x 1.22 m x 0.051 (24 x 48 x 2 in.) that maximize the rated air flow. Rated flow is 56.6 m^3/min (2000 cfm) for a two-panel design.

Filter designs 1A, 1B, and 1C in Table I are collapsible, having removable angle frames (for structural support) and flexible silicon crust on the top and bottom cut edges. Similar, previously developed designs utilized urethane as the crust sealant (3). Integral gasket flanges allow these filters to be compressed to fit into a standard 208-L (55-gal) drum. Two of the collapsible designs, the all-media (1B) and cassette (1C), are illustrated in Fig. 1.

The circular designs (1D and 1E) are intended for direct packing of two spent filters in a 208-L (55-gal) drum. Figure 2 shows the circular spiral (1D) and circular mini-pleat (1E) designs. Cylindrical designs have previously been investigated by the Europeans (4,5). They contend that the cylindrical shape permits easier installation and removal, is compatible with existing double-lid containment systems, can be transported in 208-L drums, and can be designed for easier volume reduction by compaction.

The basic innovation in designs 2A1 through 2C3 is a seal which permits easy separation of the media from the frame. Removable-frame designs, shown in Fig. 3, include latch, interlocking, and pan-type frames.

Metal-framed HEPA designs that have only minor organic content are listed in Table I as design concepts 3A1 through 3D3. Two of these designs, 3A1 and 3D1, totally eliminate the use of combustible materials through the use of aluminum separators and a dry pack of fine glass fiber on the top and bottom cut edges of the filter slug. The most difficult problem with the glass fiber sealant is achieving and maintaining a reliable seal, particularly after rough handling. A more reliable seal can be achieved with a heat-resistant silicone, urethane, or epoxy sealant. A small amount of these organics will maintain enough flexibility that the filters are more resistant to rough handling and thermal shock. Sodium silicate, ceramic, and copper-based inorganic sealants were considered but were rejected because of their rigidity. They probably would not hold up under vibration-shock or temperature-shock conditions. The present-generation fiberglass media contains a small amount of organic binder which will be a part of all filters.

Designs 4A1 through 4D3 are wood-framed filters that contain no metals and are suitable for treatment by incineration. Asbestos separators are used on two of the designs, even though environmental regulations may restrict the use of asbestos. Designs 4A2 and 4D2 incorporate a burnable fiberglass separator, and designs 4A3 and 4D3 utilize a special paper, resistant to moisture and fire. All of these designs incorporate non-metallic fasteners (plastic nails or wooden pegs) and non-metallic face screens (plastic mesh or glass mesh).

Designs 5A1 through 5C2 have alternative frame materials. Plastic and honeycomb plastic were identified for this series of HEPAs. Figure 4 shows a typical plastic-frame design (5A1) and a typical honeycomb-frame design (5A2). The plastic would probably require fiberglass reinforcing, while the honeycomb plastic would have a sufficient strength-to-weight ratio that reinforcing would not be required. Plastics, having smooth surfaces, would be easier to decontaminate than alternate materials. Also, the organic makeup permits volume reduction by incineration. But plastics have poor resistance to high temperatures and may have difficulty passing heated-air and spot-flame tests.

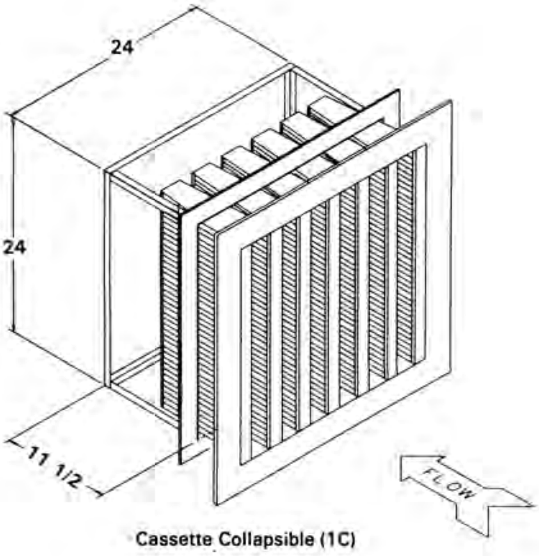

Cassette Collapsible (1C)

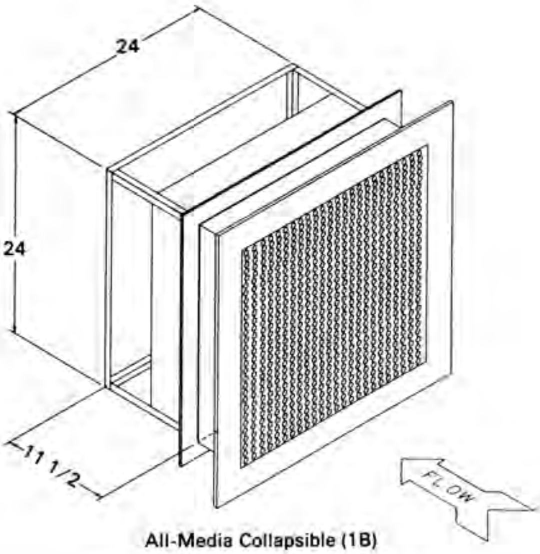

All-Media Collapsible (1B)

Fig. 1. Collapsible HEPA Designs (dimensions in inches).

Efforts to develop high-flow HEPA filters led to designs 6A and 6B. Shown in Fig. 5, design 6A is a stretched cassette that measures 0.46 m (18 in.) deep. While requiring a special housing, this filter has a 25% increased flow capacity over the standard-sized cassette filter and 150% increased capacity over the size 5 filter with aluminum separators. Concept 6B is a panel (or drawer) HEPA with mini-pleat media. It has twice the flow capacity of a standard size 5 filter. Panel filters have been developed and successfully tested for conformity to military specifications MIL-F-51068 and MIL-F-51079 (6,7,8).

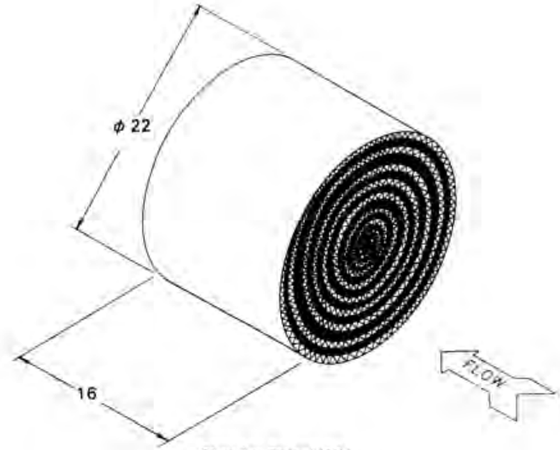

Circular Spiral (1D)

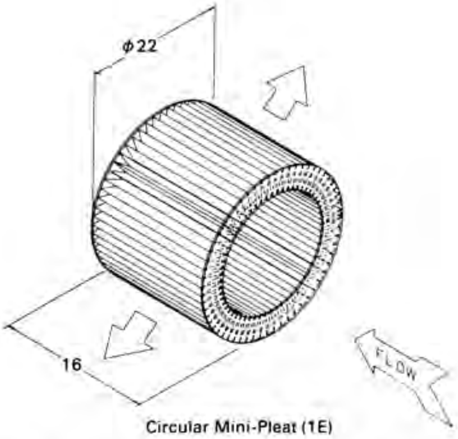

Circular Mini-Pleat (1E)

Fig. 2. Circular HEPA Designs (dimensions in inches).

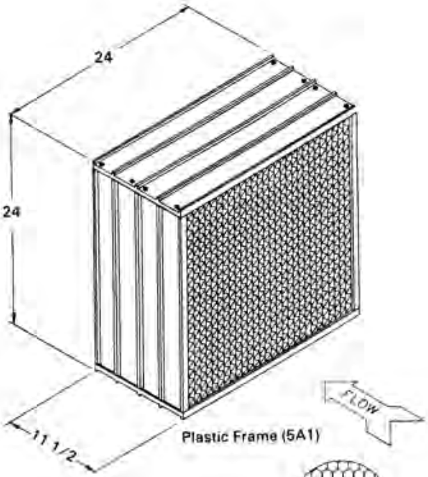

Plastic Frame (5A1)

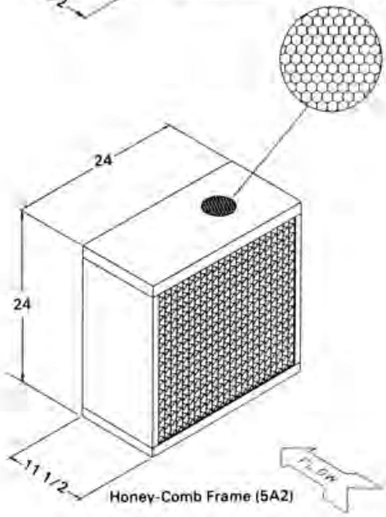

Honey-Comb Frame (5A2)

Fig. 4. Alternate HEPA Frame Material Designs (dimensions in inches).

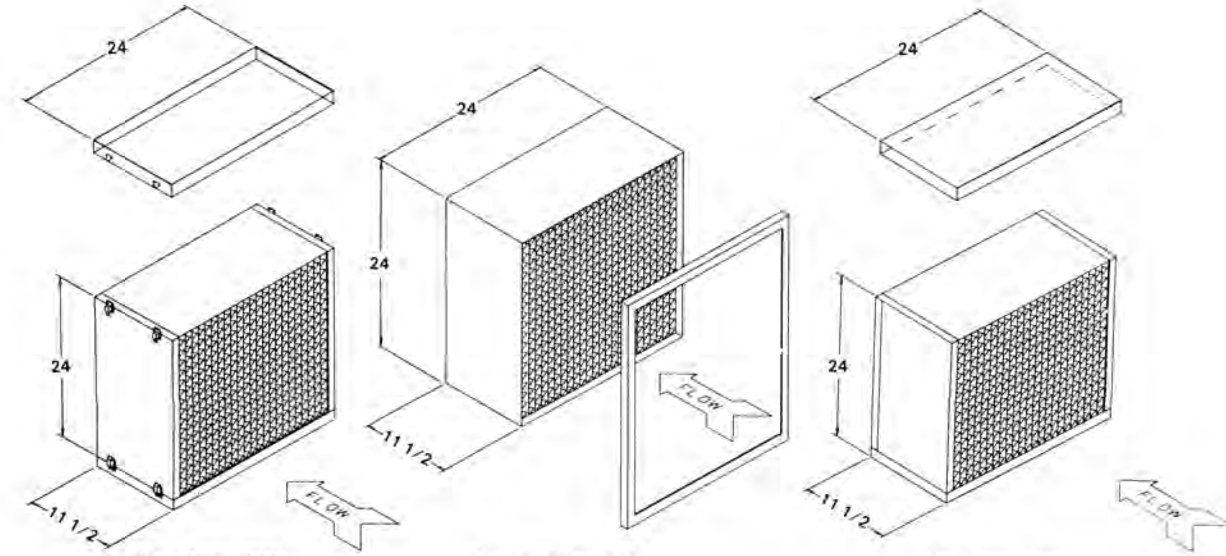

Latch Frame (2A1)

Interlock Frame (2A2)

Pan Frame (2A3)

Fig. 3. HEPA Filter Designs That Permit Easy Remote Removal of Media for Special Treatment (dimensions in inches).

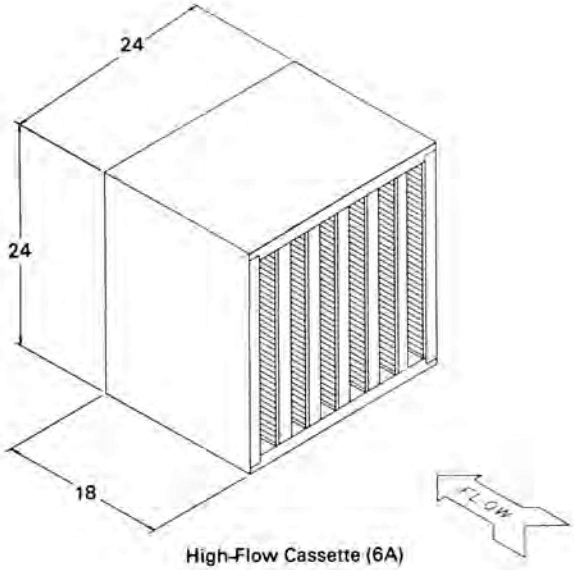

High-Flow Cassette (6A)

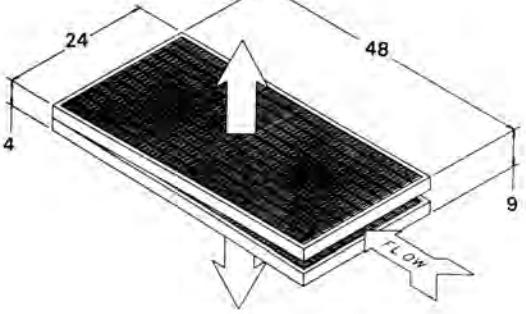

Panel Mini-Pleat (6B)

Fig. 5. High-Flow HEPA Designs (dimensions in inches).

Filter designs 5A1 through 5C2 were also considered less likely than others to pass tests for rough handling and heated air because of their plastic-based frames. Plastics have poor resistance to high temperatures, especially if resistance to 371°C (700°F) is required as per MIL-F-51068 (7).

ECONOMIC EVALUATION

This economic evaluation only takes into consideration the new-filter purchase cost and the spent-filter waste disposal costs. These are only two of the life-cycle costs of a HEPA filter; other costs include installation, servicing, testing, removal, housing modification (designs 1D, 1E, 6A, and 6B only), and the treatment, packaging, and transportation required for waste disposal. However, these "other costs" depend on the specific facility and application, and thus were not within the scope of the present study. For example, waste treatment, packaging, and transportation costs can vary greatly because they depend on the number of HEPAs processed annually and the distance of the waste treatment facility from the disposal site. Such costs are an important part of the overall economics of HEPA filter use at a specific facility.

TECHNICAL EVALUATION

The technical merit of each concept was determined using the Figure-of-Merit (FOM) methodology (9). Three primary performance criteria were identified. Each primary criterion was further subdivided into several secondary criteria. Weights were applied to each of the performance criteria for the different HEPA design concepts. Table II lists the criteria, assigned weights, and overall relative weights. The weights assigned for the evaluation criteria were established by a four-member panel from Mine Safety Appliances Company in conjunction with the PNL authors. These weights are considered an appropriate average for HEPA filters as used industry wide. Weights for specific applications can be expected to vary according to the nature of the application. The HEPA designs were rated on a scale of 1 to 10 for each of the secondary performance criteria. These ratings were multiplied by the primary and secondary criteria weights and then totaled to give an overall FOM value for each filter concept. An FOM rating of 10 is the highest possible.

Mine Safety Appliances Company used the evaluation criteria to derive FOM values for the different design concepts. Table III presents the results of the FOM evaluation. The variation in FOM values between HEPA filter designs is not great, ranging from 6.61 to 9.38.

Filter concepts with FOM values greater than 8.9 received "good" to "excellent" ratings for all of the evaluation criteria. The "all-media" designs were judged more susceptible to moisture and overpressurization because the corrugated media tend to become nested in the presence of moisture, weakening the filter and decreasing its effectiveness. This problem does not preclude use of the "all-media" designs; it does indicate, however, that the consequences of "all-media" filters becoming wet may be severe. The "cassette" designs were judged difficult to inspect in place. That difficulty is inherent in the design, resulting from the close spacing of the mini-pleat media, which makes inspection by probing difficult to impossible. The ability to test in place is a desirable criterion, but it is not required because the final test of a filter's performance is the dioctyl phthalate (DOP) test.

The collapsible concepts, 1A, 1B, and 1C, were judged less likely to pass a rough-handling test because of the flexible-crust frame. The angle-frame supports should help, however. Circular designs 1D and 1E and the panel mini-pleat design were penalized because they do not fit the standard size 5 filter housing. The high-flow cassette design 6A, while not totally meeting the standard housing dimensions, was not penalized as much because a housing retrofit may allow use of this filter.

Metal-framed designs 3A1, 3C1, and 3D1, which incorporated a dry pack of fine glass fiber, were judged less likely to pass rough-handling and heated-air tests. Since no organic adhesives are used in these designs, rough handling or thermal expansion of the frame could result in loss of the media-to-frame seal.

Filter manufacturing costs were estimated by assigning a relative cost value to each HEPA design concept. A reference cost value of "1" was assigned to a standard woodboard filter with aluminum separators and neoprene sealant. Cost estimates for each design identified (Table I) were calculated by multiplying the relative cost value by $160, the approximate cost of the standard filter.

TABLE II

Figure-of-Merit Criteria for Evaluating HEPA Concepts

Primary Criteria	Weight	Secondary Criteria	Weight	Overall Relative Weight %
Normal Safety Performance	0.45	Particle removal efficiency[a] (nominal 99.97 on 0.3 micron)	0.54	24.3
		Pressure drop at rated flow (nominal 2.54 cm water)	0.28	12.6
		Resistance to rough-handling[b]	0.18	8.1
Accident Safety Performance	0.35	Resistance to moisture and over-pressurization[b]	0.33	11.6
		Resistance to heated air[b]	0.30	10.5
		Resistance to spot-flame[b]	0.24	8.4
		Resistance to acid gases and other chemicals	0.13	4.6
Ease of Operation	0.20	Ability to fit standard housing	0.36	7.2
		Ease of installation and removal	0.34	6.8
		Ability to inspect in place	0.30	6.0

(a) Criterion based on ability to comply with MIL-F-51079 (8).
(b) Criterion based on ability to comply with MIL-F-51068 (7).

TABLE III

Results of the Figure-of-Merit Evaluation

	Design Concept	FOM Value	Criteria Receiving Lower Ratings
1A	Standard collapsible	8.75	Resistance to rough handling
1B	All-media collapsible	8.05	Resistance to rough handling, moisture, and over-pressurization
1C	Cassette collapsible	7.52	Resistance to rough handling, ability to inspect in place
1D	Spiral circular	8.25	Ability to fit standard housing
1E	Mini-pleat circular	8.51	Ability to fit standard housing
2A1	Standard latch-frame	9.38	
2A2	Standard interlock-frame	9.38	
2A3	Standard pan-frame	9.38	
2B1	All-media latch-frame	8.55	Resistance to moisture and overpressurization
2B2	All-media interlock-frame	8.55	Resistance to mositure and overpressurization
2B3	All-media pan-frame	8.55	Resistance to moisture and overpressurization
2C1	Cassette latch-frame	7.81	Ability to inspect in place
2C2	Cassette interlock-frame	7.81	Ability to inspect in place
2C3	Cassette pan-frame	7.81	Ability to inspect in place
3A1	Standard metal-frame	8.26	Resistance to rough handling and heated air
3A2	Standard metal-frame	9.38	
3A3	Standard metal-frame	9.38	
3B	All-media metal-frame	8.55	Resistance to moisture and overpressurization
3C1	Cassette metal-frame	6.90	Resistance to rough handling and heated air, ability to inspect in place
3C2	Cassette metal-frame	7.81	Ability to inspect in place
3C3	Cassette metal-frame	7.81	Ability to inspect in place
3D1	Superpack metal-frame	8.01	Resistance to rough handling and heated air
3D2	Superpack metal-frame	8.99	
3D3	Superpack metal-frame	8.99	
4A1	Standard wood-frame	9.38	
4A2	Standard wood-frame	9.38	
4A3	Standard wood-frame	9.38	
4B	All-media wood-frame	8.43	Resistance to moisture and overpressurization
4C	Cassette wood-frame	8.01	Ability to inspect in place
4D1	Superpack wood-frame	8.99	
4D2	Superpack wood-frame	9.13	
4D3	Superpack wood-frame	9.13	
5A1	Standard plastic-frame	7.84	Resistance to rough handling and heated air
5A2	Standard honeycomb-frame	7.84	Resistance to rough handling and heated air
5B1	All-media plastic-frame	6.90	Resistance to rough handling, heated air, moisture, and overpressurization
5B2	All-media honeycomb-frame	6.90	Resistance to rough handling, heated air, moisture, and overpressurization
5C1	Cassette plastic-frame	6.61	Resistance to rough handling and heated air, ability to inspect in place
5C2	Cassette honeycomb-frame	6.61	Resistance to rough handling and heated air, ability to inspect in place
6A	High-flow cassette	7.32	Ease of installation and removal, ability to inspect in place
6B	Panel mini-pleat	7.47	Ability to fit existing housing, ability to inspect in place

Waste disposal costs were calculated for the five different waste treatment options listed in Table IV. Under option 1 (no treatment), it was assumed that used filters are placed in 208-L (55-gal) or 303-L (80-gal) drums. Volume reductions for option 2 (compaction) were calculated on the basis of HEPA compaction experience at Rocky Flats Plant (10,11). The volume reduction for supercompacted filters (option 3) was calculated assuming compaction of a filter and drum to 80% of theoretical density and a 90% packing efficiency of the compacted discs in an overpack. Options 4 and 5 both involve incineration and melting of the filters to 90% of theoretical density. Under option 5, the filter frames are removed for separate packaging and disposal as LLW.

Two disposal scenarios, one as LLW and the other as high-activity waste (HAW) in a geologic repository with high-level waste, were considered in the economic evaluation. For the repository disposal scenario, it is assumed that the waste package will provide the necessary containment to meet the Nuclear Regulatory Commission (NRC) performance criteria and that the waste form does not contribute to the performance. If this were not true, disposal options 1, 2, and 3 in Table IV would not have been included in this evaluation.

TABLE IV

HEPA Filter Treatment Options Considered

Option	Description of Treatments
1.	No treatment.
2.	Compact filters at 0.69 MPa (100 psi).
3.	Supercompact filters at 55 MPa (8000 psi).
4.	Incinerate and melt filters to 90% of theoretical density.
5.	Separate HEPA frames from media, separators, and sealants. Dispose of frames as LLW. Incinerate and melt media, separators, and sealants to 90% of theoretical density and dispose of as HAW.

A disposal cost of $\$1000/m^3$ was used for LLW. This cost was estimated by escalating the 1984 costs of $\$512/m^3$ for LLW disposal plus $\$460/m^3$ surcharges for radiation at package surface (1). A repository disposal cost of $\$80,000/m^3$ was used for this study. This cost is approximate, depending to a large extent on the total volume of waste going to the repository. The $\$80,000/m^3$ value was estimated from an equation fit to a previous set of data (2) assuming that a volume of $12,000\ m^3$ is sent to the repository. This repository disposal cost is in close agreement with incremental disposal costs estimated for defense high-level wastes (12). Disposal and manufacturing costs were added to obtain cost estimates for each combination of filter concepts and treatment options. These costs were then normalized to $28.3\ m^3/min$ (1000 cfm) nominal flow rating so that they could be directly compared on the basis of equivalent filter capacity.

A summary of costs for the HEPA filters disposed of as LLW are listed in Table V. Under the "no treatment" option, costs range from $295 to $524 per 1000 cfm with the filter designs. This compares to $463 for a reference wood-framed filter and $493 for a reference metal-framed filter. The most economical design concepts for the LLW disposal scenario are the all-media filter designs 1B, 3B, 4B, and 5B1, with costs ranging from $295 to $341 per 1000 cfm. A cost reduction of at least $120 per 1000 cfm can be realized for the no-treatment option by using the all-media designs as opposed to the reference filters. The reduced costs are attributed primarily to the higher flow of $39.6\text{-}m^3/min$ (1400 cfm) for all-media filters. The use of the $56.6\text{-}m^3/min$ (2000 cfm) cassette designs for the LLW disposal scenario is not justified because of the increased purchase cost of these filters. Volume reduction by compaction (option 2) reduces the costs for the all-media designs to between $140 and $165 per 1000 cfm. This is a cost savings of at least $290 over the reference filters. The other two options, incineration and/or melting and supercompaction, do not result in significant cost reductions over the less complex compaction option. Higher treatment costs for these two options will in all likelihood eliminate them from consideration as LLW HEPA treatment methods.

The all-media collapsible design (1B) is probably the best overall design for the LLW disposal scenario because it can be collapsed into a 208-L (55-gal) drum. This feature minimizes the waste volume for option 1 (no treatment) and permits use of a standard drum compactor if option 2 (compaction) is used.

A summary of costs for the HEPA filters disposed of in a repository are listed in Table VI. Potential cost savings for this scenario are substantial. Under the no-treatment option, use of the cassette collapsible (1C), spiral circular (1D), or mini-pleat circular (1E) designs can reduce filter purchase and disposal costs to $8600 per 1000 cfm. This amount is about $16,000 below the costs for a standard separator-type filter disposed of in a 303-L (80-gal) drum. Reduced costs are attributed to the use of high-flow designs, as in the LLW scenario. Reduced costs of at least $22,000 are possible if the filters are compacted. The cassette designs are preferred for both the no-treatment option and the compaction option. Costs are reduced by more than $23,000 under the supercompaction option. The greatest cost reductions occur for the incinerate and melt options, 4 and 5. There is no apparent economic incentive for separating the media from the frame under these two options; the costs are about the same and the processing required for option 5 is more difficult. Final selection of a HEPA filter design that will eventually require repository disposal should be based on a plant-specific analysis with consideration of specific conditions, number of filters, available treatment systems, and potential disposal requirements.

CONCLUSIONS AND RECOMMENDATIONS

Forty different HEPA filters designs have been identified that could result in more efficient waste management. Many of the concepts would permit simplified waste treatment and decrease the costs of waste disposal. The most significant conclusions drawn from this study are summarized below:

1) The selection of a HEPA filter should include careful consideration of the ultimate disposal costs, since these costs can far exceed the original cost of the filters.

2) HEPA filters can be designed to improve the ease of waste treatment and reduce the costs of waste disposal. Selection of the filters should be based on the ultimate disposal method and the waste treatment system available or planned.

TABLE V

Cost Summary for the LLW Disposal Scenario

Design Concept		Rated Flow, m^3/min (cfm)	Filter Purchase Cost Plus LLW Disposal Cost, $/1000 cfm			
			Option 1 No Treatment	Option 2 Compaction	Option 3 Supercompaction	Option 4 Incinerate and Melt
1A	Standard collapsible	28.3 (1000)	445	263	250	239
1B	All-media collapsible	39.6 (1400)	295	165	156	148
1C	Cassette collapsible	56.6 (2000)	365	274	269	262
1D	Spiral circular	28.3 (1000)	420	342	328	320
1E	Mini-pleat circular	28.3 (1000)	341	200	217	224
3A1	Standard metal-frame	28.3 (1000)	493	245	201	194
3A2	Standard metal-frame	28.3 (1000)	493	245	203	194
3A3	Standard metal-frame	28.3 (1000)	524	276	233	225
3B	All-media metal-frame	39.6 (1400)	341	163	134	127
3C1	Cassette metal-frame	56.6 (2000)	388	264	244	240
3C2	Cassette metal-frame	56.6 (2000)	388	264	247	240
3C3	Cassette metal-frame	56.6 (2000)	412	288	270	263
3D1	Superpack metal-frame	39.6 (1400)	374	197	167	161
3D2	Superpack metal-frame	39.6 (1400)	374	197	168	161
3D3	Superpack metal-frame	39.6 (1400)	397	220	191	184
4A1	Standard wood-frame	28.3 (1000)	524	276	253	226
4A2	Standard wood-frame	28.3 (1000)	524	276	251	224
4A3	Standard wood-frame	28.3 (1000)	524	276	253	223
4B	All-media wood-frame	39.6 (1400)	318	140	123	103
4C	Cassette wood-frame	56.6 (2000)	412	288	278	263
4D1	Superpack wood-frame	39.6 (1400)	397	220	206	185
4D2	Superpack wood-frame	39.6 (1400)	397	220	204	183
4D3	Superpack wood-frame	39.6 (1400)	397	220	206	183
5A1	Standard plastic-frame	28.3 (1000)	493	245	205	192
5A2	Standard honeycomb-frame	28.3 (1000)	524	276	235	223
5B1	All-media plastic-frame	39.6 (1400)	341	163	135	126
5B2	All-media honeycomb-frame	39.6 (1400)	363	185	157	148
5C1	Cassette plastic-frame	56.6 (2000)	388	264	248	239
5C2	Cassette honeycomb-frame	56.6 (2000)	388	264	248	239
6A	High-flow cassette	70.8 (2500)	NA	318	293	287
6B	Panel mini-pleat	56.6 (2000)	NA	169	137	129

3) Disposal costs can be reduced by volume reduction, which can occur by any of several methods:

   - Use of high-flow filter designs that reduce the waste generation rate of filters
   - Collapsible or circular filter designs for more efficient direct disposal
   - Compaction (both standard and supercompaction) in a standard 208-L (55-gal) drum
   - Incineration and melting of residues (low metal content is most advantageous).

4) Low-level waste disposal costs do not justify the same degree of volume reduction as repository disposal costs. Savings of about $120 to $290 per HEPA filter are projected for LLW disposal as opposed to savings of up to $23,000 per HEPA filter for repository disposal.

5) Complete elimination of organic materials from HEPA filters is not possible since the filter fabric contains organic binders. However, organic content can be significantly reduced.

REFERENCES

1. W. A. ROSS, K. J. SCHNEIDER, J. L. SWANSON, K. M. YASUTAKE, and R. P. ALLEN, "Preliminary Analysis of Treatment Strategies for Transuranic Wastes from Reprocessing Plants," PNL-5130, Pacific Northwest Laboratory, Richland, Washington (1985).

2. W. A. ROSS, K. J. SCHNEIDER, K. H. OMA, R. I. SMITH, and L. R. BUNNELL, "Evaluation of Alternative Treatments for Spent Fuel Rod Consolidation Wastes and Other Miscellaneous Commercial Transuranic Wastes," PNL-5838, Pacific Northwest Laboratory, Richland, Washington (1986).

3. T. T. ALLAN, "The Development of a Lightweight, Compactible/Disposable HEPA Filter," *Proc. 17th DOE Nuclear Air Cleaning Conference*, pp. 1110-1114, Harvard Air Cleaning Laboratory, Cambridge, Massachusetts (1982).

4. S. HACHNEY and R. P. PRATT, "Development of Filters and Housings for Use on Active Plant," *Proc. 17th DOE Nuclear Air Cleaning Conference*, pp. 482-503, Harvard Air Cleaning Laboratory, Cambridge, Massachusetts (1982).

TABLE VI

Cost Summary for the Repository Disposal Scenario

	Design Concept	Rated Flow, m^3/min (cfm)	Filter Purchase Cost Plus Repository Disposal Cost, $/1000 cfm				
			Option 1 No Treatment	Option 2 Compaction	Option 3 Supercompaction	Option 4 Incinerate and Melt	Option 5 Separate Frames, Incinerate/Melt
1A	Standard collapsible	28.3 (1000)	16900	2320	1320	430	NA
1B	All-media collapsible	39.6 (1400)	12000	1630	880	240	NA
1C	Cassette collapsible	56.6 (2000)	8600	1300	930	400	NA
1D	Spiral circular	28.3 (1000)	8600	2400	1250	610	NA
1E	Mini-pleat circular	28.3 (1000)	8600	2320	980	370	NA
2A1	Standard latch-frame	28.3 (1000)	NA(a)	NA	NA	NA	420
2A2	Standard interlock-frame	28.3 (1000)	NA	NA	NA	NA	420
2A3	Standard pan-frame	28.3 (1000)	NA	NA	NA	NA	420
2B1	All-media latch-frame	39.6 (1400)	NA	NA	NA	NA	250
2B2	All-media interlock frame	39.6 (1400)	NA	NA	NA	NA	240
2B3	All-media pan-frame	39.6 (1400)	NA	NA	NA	NA	250
2C1	Cassette latch-frame	56.6 (2000)	NA	NA	NA	NA	420
2C2	Cassette interlock-frame	56.6 (2000)	NA	NA	NA	NA	420
2C3	Cassette pan-frame	56.6 (2000)	NA	NA	NA	NA	420
3A1	Standard metal-frame	28.3 (1000)	24400	4550	1060	500	NA
3A2	Standard metal-frame	28.3 (1000)	24400	4550	1230	500	NA
3A3	Standard metal-frame	28.3 (1000)	24400	4580	1210	530	NA
3B	All-media metal-frame	39.6 (1400)	17400	3240	910	340	NA
3C1	Cassette metal-frame	56.6 (2000)	12400	2420	810	450	NA
3C2	Cassette metal-frame	56.6 (2000)	12400	2420	1080	460	NA
3C3	Cassette metal-frame	56.6 (2000)	12400	2440	1020	480	NA
3D1	Superpack metal-frame	39.6 (1400)	17500	3270	870	440	NA
3D2	Superpack metal-frame	39.6 (1400)	17500	3270	990	440	NA
3D3	Superpack metal-frame	39.6 (1400)	17500	3300	980	460	NA
4A1	Standard wood-frame	28.3 (1000)	24400	4580	2780	580	NA
4A2	Standard wood-frame	28.3 (1000)	24400	4580	2640	430	NA
4A3	Standard wood-frame	28.3 (1000)	24400	4580	2810	390	NA
4B	All-media wood-frame	39.6 (1400)	17400	3220	1790	250	NA
4C	Cassette wood-frame	56.6 (2000)	12400	2440	1660	440	NA
4D1	Superpack wood-frame	39.6 (1400)	17500	3300	2170	540	NA
4D2	Superpack wood-frame	39.6 (1400)	17500	3300	2030	370	NA
4D3	Superpack wood-frame	39.6 (1400)	17500	3300	2210	340	NA
5A1	Standard plastic-frame	28.3 (1000)	24400	4550	1410	380	NA
5A2	Standard honeycomb-frame	28.3 (1000)	24400	4580	1350	400	NA
5B1	All-media plastic-frame	39.6 (1400)	17400	3240	1020	230	NA
5B2	All-media plastic-frame	39.6 (1400)	17500	3260	980	250	NA
5C1	Cassette plastic-frame	56.6 (2000)	12400	2420	1150	380	NA
5C2	Cassette honeycomb-frame	56.6 (2000)	12400	2420	1110	380	NA
6A	High-flow cassette	70.8 (2500)	NA	3000	1000	510	NA
6B	Panel mini-pleat	56.6 (2000)	NA	3530	990	320	NA

(a) Not Applicable for the design concept and treatment option combination.

5. M. PRINZ, "Vertical Removable Filters in Shielded Casing for Radioactive Cells and Process Gaseous Wastes," *Proc. 17th DOE Air Cleaning Conference*, pp. 457-481, Harvard Air Cleaning Laboratory, Cambridge, Massachusetts (1982).

6. C. E. ROSE and R. D. RIVERS, "Performance and Environmental Characteristics of a Compact, High-Capacity HEPA Filter Design," *Proc. 15th DOE Nuclear Air Cleaning Conference*, pp. 1176-1184, Harvard Air Cleaning Laboratory, Cambridge, Massachusetts (1978).

7. Military Specification MIL-F-51068F, "Filters, Particulate, High Efficiency, Fire Resistant," U.S. Army Armament Research and Development Command, U.S. Government Printing Office, Washington, D.C. (1986).

8. Military Specification MIL-F-51079D, "Filter Medium, Fire-Resistant, High-Efficiency," U.S. Army Armament Research and Development Command, U.S. Government Printing Office, Washington, D.C. (1985).

9. American National Standard ANSI/ANS-40.35, pp. 18-20 (1984).

10. O. I. BUTTEDAHL, "Volume Reduction of Used High-Efficiency Particulate Air (HEPA) Filters," RFP-3132, Rocky Flats Plant, Golden, Colorado (1981).

11. O. I. BUTTEDAHL and G. W. BRASSELL, "Compaction and Packaging of Low Level and TRU Waste-Contaminated HEPA Filters," *Proc. Symposium on Waste Management, Waste Management '81*, March 24-28, 1985, ed. R. G. Post, Vol. 2, pp. 837-848, American Nuclear Society, Tucson, Arizona (1981).

12. Defense High-Level Waste Technology Program Office, "Perspective on Methods to Calculate a Fee for Disposal of Defense High-Level Waste in Combined (Civilian/Defense) Repositories," DOE-RL-86-10, U.S. Department of Energy Richland Operations Office, Richland, Washington (1986).