DRY VAULT STORAGE OF
LIGHT WATER REACTOR FUEL

J. M. Cumiskey
Stone & Webster Engineering Corp.
Nuclear Technology Division
Boston, Massachusetts 02107

ABSTRACT

This document is based on work performed by Stone & Webster Engineering Corporation (SWEC), Boston, Massachusetts, and National Nuclear Corporation (NNC), Risley, England. The report describes 1) SWEC's design concept efforts in spent fuel handling and containerization; 2) NNC's design studies for an advanced Gas-Cooled Reactor (AGR) dry store for the UK; and 3) NNC's development and detail study for a storage vault and fuel container handling machine (CHM) for a combination dry store for AGR and PWR fuels. The dry vault storage facility design provides for the receipt, unloading, temporary dry storage, inspection, drying, and containerization of the irradiated fuel, and storage of the containers in concrete cells which are cooled by air under natural draft. The facility design has been developed to the construction drawing, equipment specification, and safety analysis report stage in the United Kingdom. This gives the design both a technical and licensing advantage over other types of dry storage. The design is based on containerizing the fuel which allows high density storage. The dense storage, in turn, results in a much lower dollar per kilogram cost than currently published values for dry storage.

DRY VAULT DESIGN

Design Features

The NNC dry vault storage facility is designed to handle irradiated fuel with a minimum of 5 years' decay from LWR stations.

The storage facility consists of a front-end plant or processing area and the container storage vaults proper. The front-end plant provides for receipt, unloading, temporary storage, inspection, drying and containerization of spent fuel.

The processing area of a facility with a maximum capacity of 5000 MTU would process fuel at an average rate of 1.55 MTU/day or 2.3 MTU/day maximum. This rate is achieved with a single processing train that has ample margin to account for routine maintenance and repair of equipment.

The storage vault comprises channels formed by embedding an array of vertical pipes in concrete. Passive cooling of containerized fuel placed in the channels is accomplished by convective air flow. Humidity and temperature controls are provided by venturi recycle, described later, which is designed as an integral part of the vault structure. The storage channels and cooling capacity are sufficient for two 5-year decayed spent fuel assemblies. With administrative control, a 3-year decayed bundle can be stored. The administrative control assures that the total heat rate for the channel remains within acceptable limits.

The storage vault comprises individual storage modules each with a capacity of 600 MTU. An acceptable receipt rate that minimizes conflicts with the reactor plant fuel pool operations would result in a minimum fill time of 2 years per storage module. This appears to allow for a reasonable expansion program based on constructibility studies, and it minimizes financial investment. The plant is sized to accommodate receiving, handling, and storing of fuel during normal 8-hour day shifts for 5 days per week. A fuel drying cycle, if required, is to be carried out during the night shift under automatic control and minimum supervision. The plant design is such that the fuel would remain in a safe condition even if control or electrical failure occurred.

Wherever possible, plant equipment has been made accessible and fully maintainable during operations. Arrangements have been made for equipment operating in inaccessible areas to be removed for contact maintenance. All remote plant operation is carried out in shielded areas to allow continuous normal operations by personnel.

The facility handles fuel containers nominally at atmospheric pressure, so that there are no pressure component safety considerations.

The fuel assemblies are sealed in containers which are of a size that will allow for storage of one PWR or two BWR elements.

Containers at the vault are not opened except for occassional inspection followed by recontainerizing on a limited scale.

The fuel containers and storage vaults have a safe life of 50 years, and the layout and component design account for those features which may be detrimental, e.g., corrosion, handling damage, thermal stresses.

The design allows for the necessary optimization of various requirements of initial construction, periodic extension, and operating cycles. These requirements ensure safe operation and personnel access by appropriate sizing and layout of the storage modules.

Damaged or suspected damaged fuel assemblies can be accepted at the facility. Any assembly which is significantly damaged, in transit or during handling at the facility, is bottled in a thin-walled container which is then containerized and processed into the vault in the same method as other fuel assemblies. The store is so designed to prevent contaminants from entering the vaults. Therefore, decommissioning costs is a concern for the front end facility only.

The vault and equipment design prevents fuel oxidation by keeping the fuel below 175°C. Calculated fuel pin temperatures show close correlation with test data.[2] The design also addresses and precludes corrosion of fuel containers and vault components. This corrosion protection does not depend on any coating system or mechanical equipment; it is a totally passive system. The corrosion-free environment of the vault allows it to be built as a simple concrete block with built-in carbon steel pipe forms. In addition, the fuel containers are made of standard lengths of carbon steel pipe. This is in contrast to other vault designs requiring expensive stainless steel racks. Containerizing allows fuel storage two-high in each vault channel without affecting various requirements for long-term storage such as fuel retrievability. Fuel stacking doubles the capacity of each vault with only a small increase in construction cost. The high density storage design, in comparison to all other storage concepts, results in a lower dollar per kilogram cost. The facility design has been developed to the construction drawing, equipment specification, and safety analysis report stage for the Central Electricity Generating Board in the UK. This, we believe, gives the design both a technical and licensing edge over other types of dry storage.

Plant Description

The layout of the facility buildings, plant, and equipment is arranged to ensure a smooth, reversible operational flow, with minimum change of direction or level. Figure 1 provides a plot plan of a 600 to 5000 MTU storage facility at a location separate from a reactor site. Such a store is envisaged as a central store for a multi-site utility or a pool of utilities. The same receiving and storage structures, without the supporting buildings for services would be provided for an at-reactor site location. The fuel reception area (front end) is required to 1) handle the cask, 2) handle and contain a large number of fuel assemblies, and 3) perform a number of related preparational processes simultaneously.

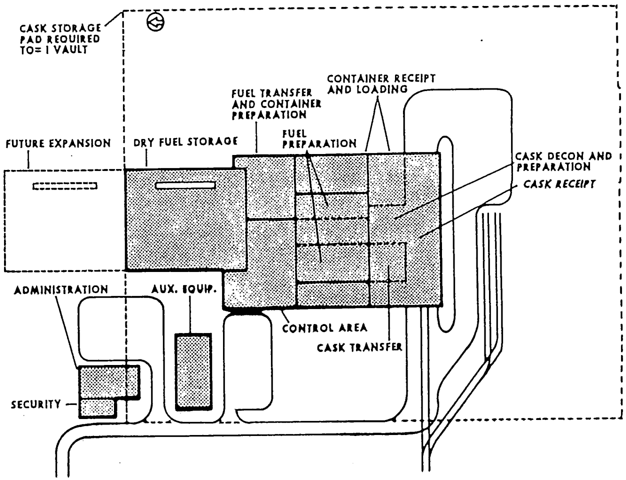

FIG. 1 PLOT PLAN FOR 600 - 5000 MTU STORAGE.

The storage facility is shown as a series of vaults in line. The line arrangement allows the front-end to be built as a compact building at one end of the storage vaults.

Although all of the fuel handling operations are similar to that in various existing facilities, three noteworthy innovations exist in the front-end plant. These are:

1. A seal between the cask and the fuel preparation area (hot cell) prevents the insides of the cask from being exposed to external atmosphere other than that of the hot cell.
2. The seal arrangement at a fuel loading port, between the hot cell and the fuel transfer and container preparation area, allows the fuel to be loaded into the container and the container to be closed without contaminating the external surface of either the container or its closure cap. This arrangement ensures that the container handling machine (CHM) and vaults remain free of contamination.
3. The seal welded container is loaded into the CHM through a shield tube that allows the container to be swipe-tested for contamination (although no contamination is expected). Operating cost assumes swipes to be done on a sampling basis and, if necessary, wet or dry decontamination of the container can be performed in the tube.

Fuel Container Handling Machine

The CHMs consist of a rail-borne gantry spanning one storage cell and traversing one complete row of storage modules. Mounted on the gantry is a traversing magazine which consists of a shielded cylinder containing either one or up to five container positions. Provision is made for including a television camera for channel and container inspection. The containers are raised into the magazine through the transfer tube. The machine then travels to the appropriate storage cell and is stationed over the selected storage position. The floor plug is removed, a fuel container lowered into the cell, and the plug replaced. The machine is unpressurized natural draft cooled, and is relatively simple.

The CHM represents a simplified version of the Advanced Gas-Cooled Reactor (AGR) refueling machine. The basic design, therefore, is supported by many hours of operation. The bulk of the weight is in the magazine shielding. The shielding permits personnel access to the external component structure and to mechanisms at all times for inspection and maintenance. The hand-operated override of electrically operated mechanisms will facilitate retrieval under faulted conditions. The fuel is contained precluding contamination of the machine.

Container Storage Vault Module

The fuel container store vault module consists basically of a concrete block, in which an array of 625 vertical carbon steel cooling channel tubes are built. These tubes are supported in a concrete matrix which is supported above the mat; the interspace being the air inlet mixing plenum (see Fig. 2). The upper ends of the tubes are located with an air space between the top of the tubes and the underside of the charging floor; the interspace being the air outlet mixing plenum. There is no criticality constraint and the packing density is mainly influenced by coolant flow passage and construction parameters. The fuel containers are loaded into the steel channel tubes in a predetermined pattern until one complete layer is stored. The pattern is then repeated for the second layer.

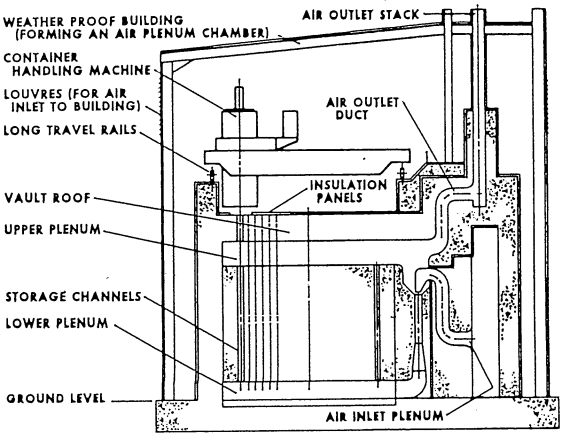

FIG. 2 SPENT FUEL STORAGE VAULT - CROSS SECTION.

There are no moving parts or special linings, apart from the steel forms and concrete surface finishes in the storage matrix.

The dewpoint of the incoming air is lowered sufficiently to prevent absorption of moisture by pollutant or salts in the vault or on the containers. This process prevents conditions which may lead to corrosion. There is, therefore, no need for maintenance or material replacement within the storage module. Air inlet and outlet is arranged through shielded ducts with dogleg turns built in to prevent direct radiation streaming. There are no permanent filters fitted into the stack. The front-end plant of the facility allows for detailed inspection of selected containers retrieved from the vault. The inspection includes cutting open for external examination and selection of samples for laboratory assessment. This will reduce the possibility of unforeseen failures leading to widespread contamination.

The decay heat from the fuel heats the air in the annulus between the container and storage channel wall. The hot air rises into the upper plenum and up the air outlet duct and stack. The natural draught draws additional air in through the inlet. The height of the stack is selected so as to amplify the natural draught of the storage matrix to the point that:

1. The bulk upper plenum temperature does not exceed 80°C (176°F). Close correlation of calculated pin temperatures and test data have been obtained.[2]

2. The flow through the inlet venturi nozzle is adequate to recirculate sufficient air to reduce the relative humidity of the lower plenum to 30 percent or lower.[1]

The steel stack is insulated in order to get maximum benefit of its height.

The most unique feature of the vault is the venturi (Fig. 3).

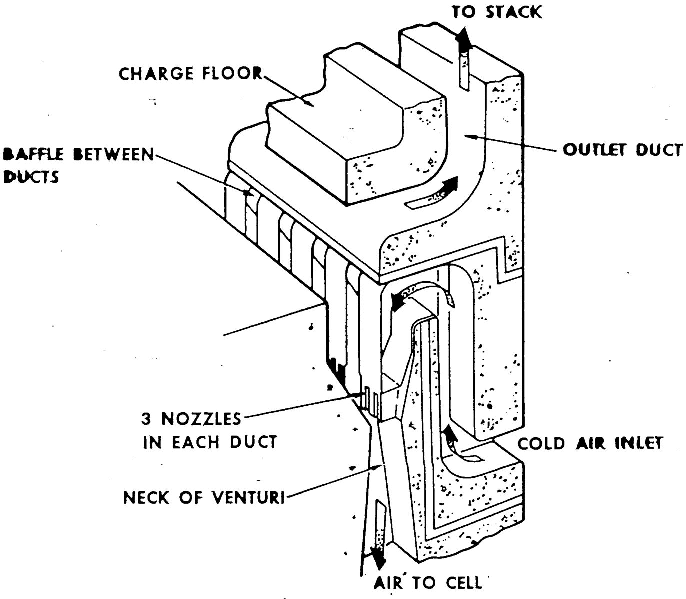

FIG. 3 RECIRCULATING VENTURI.

The ejector venturi system minimizes corrosion of the fuel containers by mixing the incoming cold air with a portion of the hot air leaving the storage vault. Sufficient recirculation of the hot air is required to achieve a mixed air temperature which is at a suitable relative humidity to inhibit container corrosion. The design point of 30 percent relative humidity during the most adverse ambient conditions is discussed below. The ejector venturi system is basically a vacuum pump and its operational principles are well known. However, there is little empirical data relating to large, rectangular ejector venturi systems operating under very low pressure head conditions as is the case in the dry store design. A significant amount of development work has been performed on the venturi and the vault circulation.

The driving force for the recirculation loop is the buoyancy head between the warm air in the venturi and the hot air in the vault channels, plus pressure recovery from the venturi. This head must be sufficient to overcome the flow losses in the recirculation loop. The non-uniform heating of the channel must be taken into account. Five separate nozzle configurations have been examined and three have been tested extensively. This allows for the matching of the most adverse ambient air and fuel loading pattern for any specific site to provide a required recirculation over a wide range of ambient conditions expected at any U.S. site.

The "throughflow", fed to and from the recirculating loop by the buoyancy difference between the ambient temperature cooling air and stack temperature, must overcome the friction losses in the air inlet duct, outlet duct, and stack. The throughflow must also be capable of producing the venturi nozzle kinetic energy. The dominant items are the nozzle kinetic energy and, at a much lower level, stack outlet. The latter comprises skin friction plus the energy losses in the stack outlet air arrangement. The friction loss in the stack only accounts for 2 percent of the loop loss. Thus, incremental increases in the stack height effectively produce the full theoretical natural draught increment, since the large stack outlet loss remains constant.

Proper selection of a venturi and stack height combination will provide corrosion protection for the life of the store and will maintain fuel pin temperatures below 175°C in normal, below 200°C in abnormal, and below 250°C in faulted cases.

During the initial loading of the vault, when the total heat rate is low, a number of the venturis are blocked off by manually adjusted dampers. As the vault heat rate is increased, more inlets are opened and adjusted. The inlet dampers are adjusted to maintain the upper plenum temperature, lower plenum relative humidity, and fuel pin temperature at or below set limits. As the fuel in the vault decays, the dampers are periodically adjusted to account for a fall off in decay heat.

Freedom from corrosion occurs below a critical relative humidity (RH) at the metal surface. The critical RH depends on the contaminants present; e.g. 35 percent for ferric chloride, 32 percent for magnesium cloride, and 32 percent for calcium chloride have the lowest observed critical RH. The latter are present in sea salt and therefore relevant to coastal sites. For the completed AGR dry fuel store design in the UK magnesium chloride presence sets the design criteria at 30 percent RH. Traces of ferric chloride will be present or will develop on the surface of any iron based material (including stainless steel) if any chloride contamination is present. Since the store is intended to last 50 to 100 years, ferric chloride sets the design criteria for non-coastal sites at less than 35 percent.

Safety Aspects

Individual containers provide a higher integrity than a large calendria-type buffer storage cell and are less complex than individual buffer storage tubes. All handling operations are contamination-free, and containers can be retrieved and transported for fuel reprocessing or disposal elsewhere without contamination of equipment. Fuel is contained at atmospheric pressure so that an uncontaminated open air cooling cycle may be used. The containers and the handling methods are such that accidents cannot lead to unacceptable consequences. Drop tests have indicated that the design of the high integrity containers and its handling provisions are such that an accidently-dropped container will not break or release radioactive material.

Fault analysis and safety studies deomonstrate that there is no need for permanent filters to be fitted in the stack. However, the stack outlet is continuously monitored for abnormal activity as well as to provide regular reports required by a licensing authority. Any activity released from a leaking container would in any event be extremely small and adequate time is available to locate and remove the container responsible for the release. These provisions constitute an engineered barrier in addition to the containment barriers provided by the fuel clad and the container.

The facility allows for retrieval of selected containers for detailed inspection including cutting open for internal examination and selection of samples for laboratory assessment.

Station Services

The main incoming station services are electrical and water supplies. These are distributed to the various points within the facility from a substation and a pumping station. The incoming electrical supply is fed to two separate switchboards, so that alternative supplies are available. Water requirements are for potable and service water supplies. Appropriate pumping and treatment plants together with the necessary distribution pipework will be part of the detailed store design and are site specific. Telecommunications is expected to be included in the facility design as an external service. However, its discussion is outside the scope of this document.

Control and Instrumentation

Overall control of the facility will be from a central control room in the front-end plant. The operational state of the storage facility will be indicated on a central panel. Local control is anticipated from shielded *corridors for* activities such as remote welding of containers, where visual assessment through shield windows is possible. A suitable cabin mounted on the CHM is proposed for its operation. Detailed instrumentation requirements will be the subject of agreement with the owners during the design stage. Currently, it is envisaged that the general standard will be in accordance with current power station practice and will cover indication, alarm, and control

Structural

The structural work for the facility conforms to current design codes for general construction, with appropriate allowance for radiation shielding to give acceptable levels of dose rates in operational areas and for construction crews during expansions. The civil structures are required to retain their integrity against earthquake conditions, internal and external hazards, general loading, normal operating, and transient conditions. The storage cells in particular are arranged to cope with expansion movements covering a range of air temperature extremes from inlet to outlet. External insulation is applied where appropriate to reduce thermal gradients. The facility weathertight building is steel-framed and sheeted. The storage building is expected to have normal power and lighting facilities but will not be heated. In addition to the weather protection function, this building will serve as a plenum chamber for the storage cell air inlets, effectively dampening out any adverse cooling flows. The civil structures are designed to retain their integrity against earthquake and light aircraft crash, as well as general loading, normal operating and transient conditions.

Decommissioning

No specific study has been carried out, because the methods to be developed for all LWR stations will apply to the front-end plant. The storage cells should be relatively free of any activity or contamination once fuel containers are removed, and therefore, no decommissioning problem is foreseen.

Cost

The single train facility designed to receive 300 MTU/year is estimated at $36 million (1981 $). An additional 600 MTU storage modules can be added at $12 million per module. This cost includes engineering and design, licensing, construction, and equipment installation cost and an allowance for indeterminants. The yearly operating cost, which includes the cost of 625 containers and transportation, is approximately $2.25 million.

CONCLUSION

The British AGR Dry Fuel Facility design work is directly applicable to the U.S. Only minor physical dimensional changes are required in the storage vault. These changes can be accomplished within the physical constraints of the vault design without invalidating the development or confirmation tests. A site-specific evaluation would provide the data required to develop a safety analysis reprot (SAR) under 10CFR72. This SAR could be developed and submitted by a utility or utility group independently or in conjunction with the DOE. Such an approach would place the utilities in a position to pursue the alternative on a very short notice if and when it were required.

REFERENCES

1. N. Bradley and Brown, G. A., "Interim Dry Storage of Irradiated Fuel and Vitrified High Activity Level Waste." IAEA, International Conference on Nuclear Power Experience, Vienna, September 13-17, 1982.

2. R. Unterzuber, Milner, R. D., Masenkovich B. A., and Kubancsek, G. M., "Spent Fuel, Dry Storage Testing at EMAD." (March 1978 through March 1982) PNL-4533; AFSD-TMI-3162 UC-85, Westinghouse Electric Corp., Advanced Energy System Division, Pittsburgh, PA, 15236.